TECHNICAL DATA SHEET

MRT-X 2550 PRIVILEGE+

Manitou Telescopic

MANITOU
HANDLING YOUR WORLD

MRT-X 2550 PRIVILEGE+

	MRT-X 2550 Privilege +
Lifting	
Max. capacity with forks at 500 mm LC	4999 kg
Max. lifting height	24.70 m
Max. outreach	21.40 m
Tyres	445 / 65 R22.5
Stabilizers	duplex telescopic simultaneously and individually controlled
Full continuous rotation	turret mounted on a double slew ring with internal gearing / slewing system with negative brake
Frame levelling / oscillating axle	on front axles +/- 8° oscillating rear axle with automatic hydraulic lock out on rotation (> +/- 7.5°) and boom height (> 55°)
Braking	
Service brake	oil bath multiple disc brakes hydraulically assisted on both axles
Parking brake	automatic negative parking brake
Engine	MERCEDES - STAGE 3A
Type	OM 904 LA-E3A
Displacement	4 cylinders - 4,25 liters
Power	150 HP/110 kW
Max torque	580 Nm - from 1200 to 1600 rpm
Gradeability	40%
Batteries	24 V: 2x 12V - 120 Ah - 850 A
Transmission	hydrostatic
Drive wheels	4 wheel drive
Steering mode	4 wheel steer - 3 steering modes
Max. travel speed (may vary according to applicable regulations)	40 kph
Controls	2 multi-function joysticks
Hydraulics	
Hydraulic pump	115 l/min – 275 bar gear type
Capacities	
Hydraulic oil	225 l
Fuel	305 l
Unladen weight (with forks)	18900 kg
Dimensions	
Overall width	2.49 m
Overall width (stabilizers extended)	5.55 m
Overall height	3.05 m
Overall length to carriage	7.84 m
Turning radius (over tyres)	4.88 m
Ground clearance	0.35 m
Standard forks (length x width x thickness)	1200 x 150 x 50 mm
Safety	load state monitoring system (crane norm) attachement recognition system (E-Reco) cab compliant with ROPS / FOPS level II standard
Noise and vibration	
Noise at driving position (LpA)	79.7 dB
Environmental noise (LwA)	108 dB
Vibration to whole hand/arm	<2.50 m/s^2

This brochure describes versions and configuration options for Manitou products which may be fitted with different equipment. The equipment described in this brochure may be standard, optional or not available depending on version. Manitou reserves the right to change the specifications shown and described at any time and without prior warning. The manufacturer is not liable for the specifications given. For more information, contact your Manitou dealer. Non-contractual document. Product descriptions may differ from actual products. List of specifications is not comprehensive. The logos and visual identity of the company are the property of Manitou and may not be used without authorisation. All rights reserved. The photos and diagrams contained in this brochure are provided for information only.
MANITOU BF SA - Limited company with board of directors - Share capital: 39,547,824 euros - 857 802 508 RCS Nantes

MRT-X 2550 PRIVILEGE+

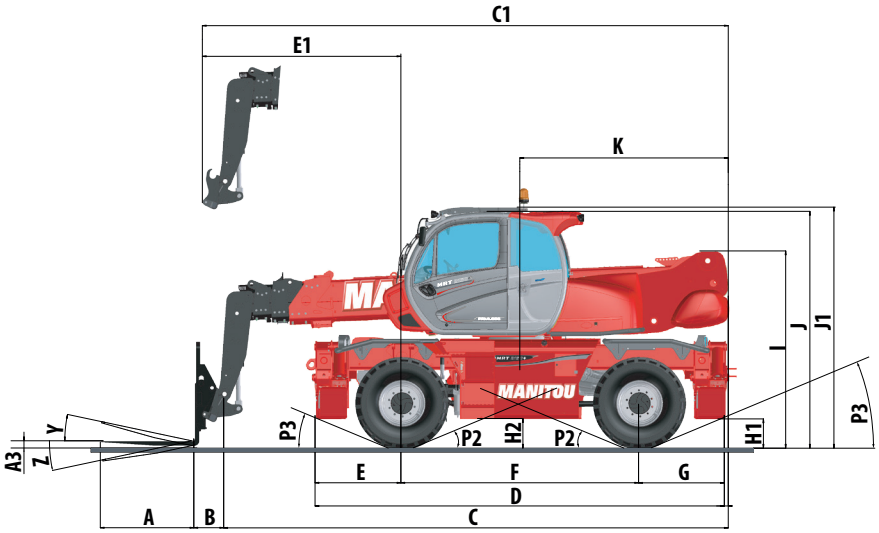

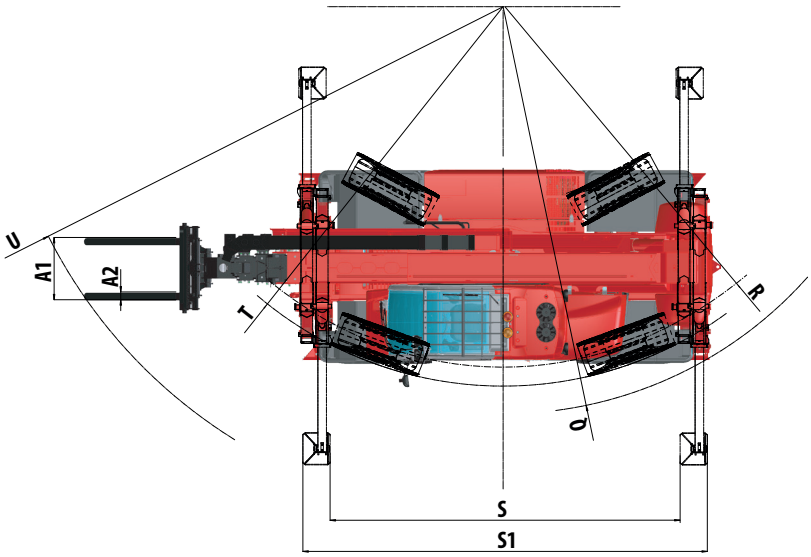

mm	MRT 2550
A	1200
A1	150
B	385
C	7450
C1	7745
D	5350
E	1150
E1	3045
F	3050
G	1150
H1	350
H2	350
I	2630
J	3000
J1	3050
K	3175

mm	MRT 2550
L	2050
M	2490
N	5140
O	5555
P	230
P2	15°
P3	22°
Q	5235
R	4650
S	4500
S1	5190
T	4880
U	6915
V	950
Y	12°
Z	105°

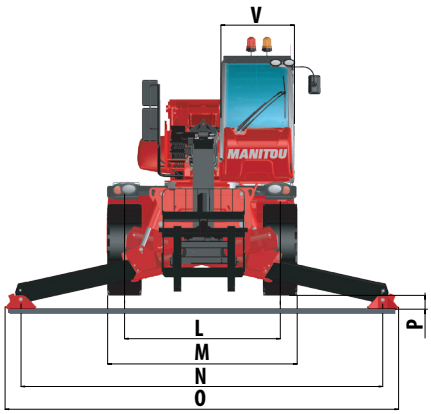

MRT-X 2550 PRIVILEGE+

Frontal on wheels
with forks

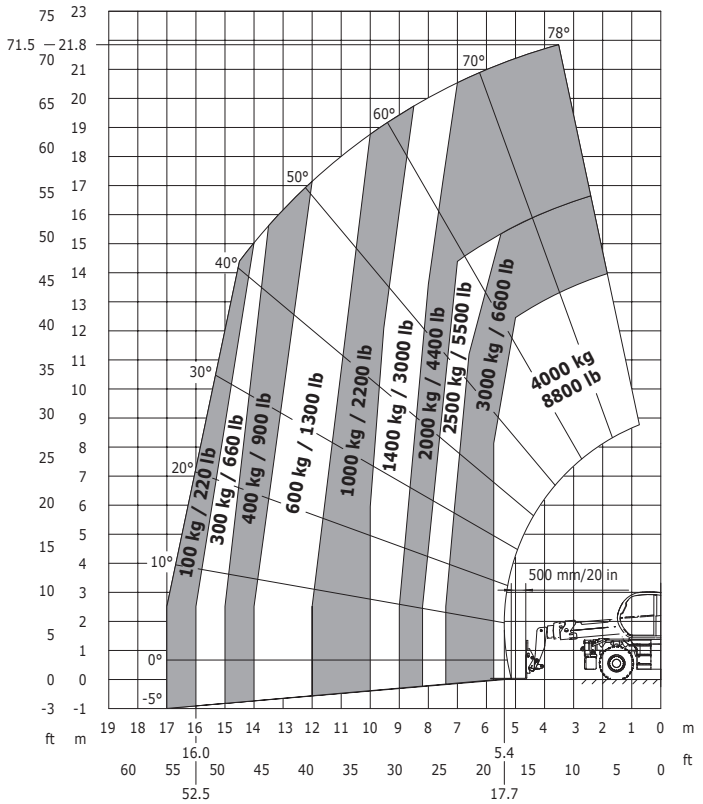

Rotation on extended stabilizers
with forks

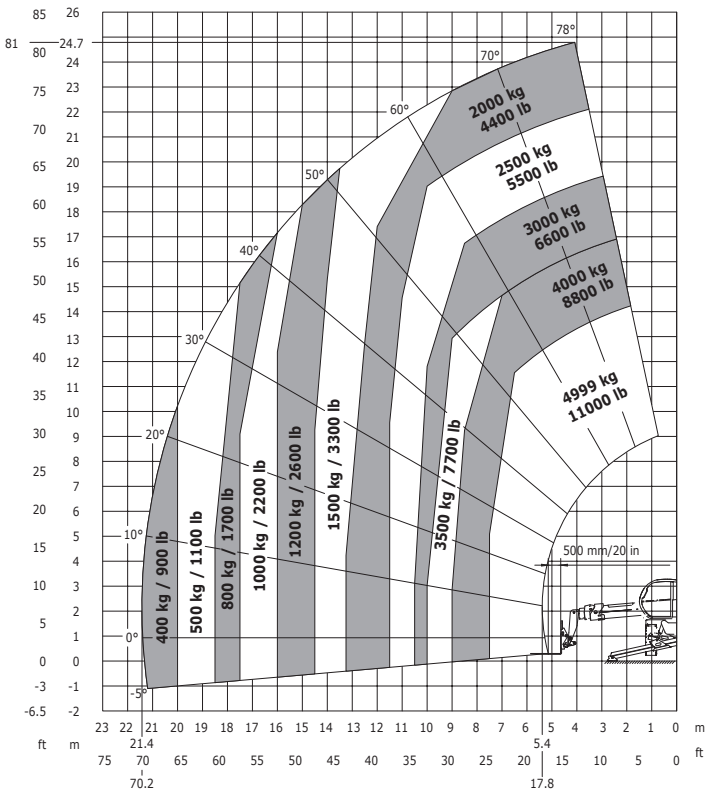

Rotation on extended stabilizers
with 1500 jib

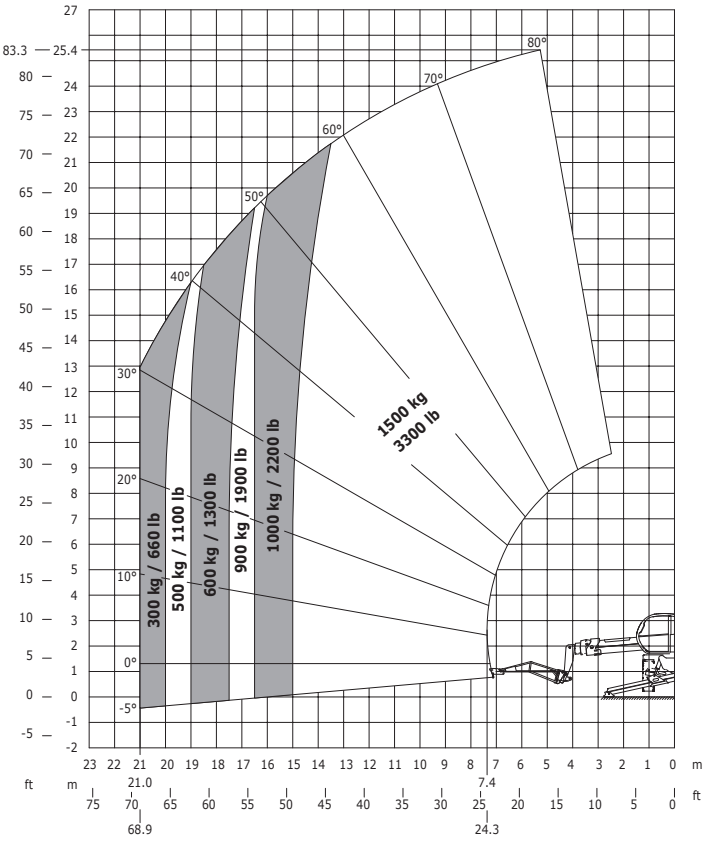

Rotation on extended stabilizers
with 5000 kg winch

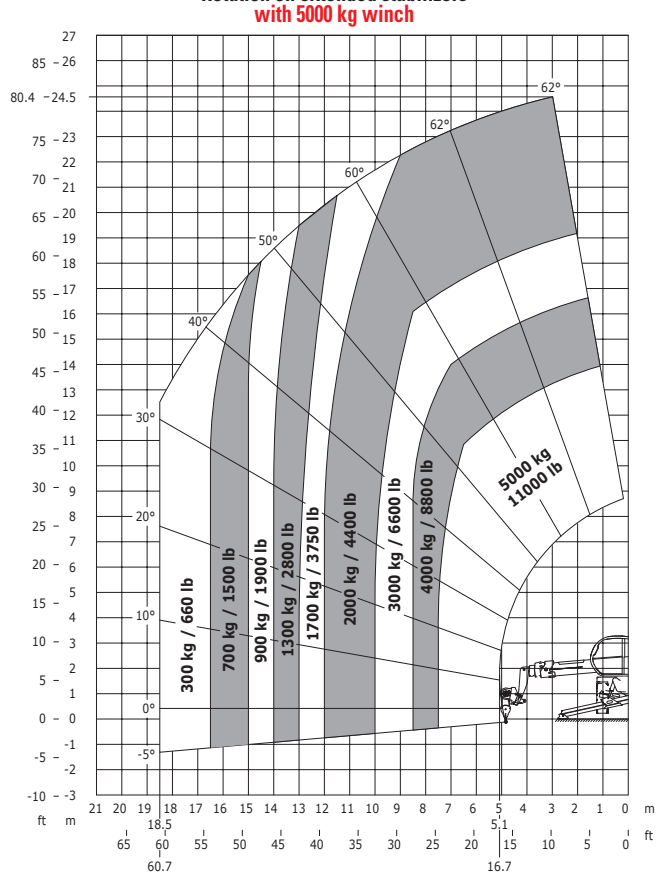

Your MANITOU dealer

MANITOU
HANDLING YOUR WORLD

Head office :
B.P. 249 - 430 rue de l'Aubinière - 44158 Ancenis Cedex – France
Phone.: +33 (0)2 40 09 10 11 - Fax: +33 (0)2 40 09 10 97
www.manitou.com